MATERIALS		
ITEM	QTY.	DESCRIPTION
1	2	1 x 8 x 2.4 m board (19 x 184 x 2,440 mm)
2	2	2 x 4 x 17 cm board (38 x 89 x 170 mm)
3	2	2 x 4 x TBD board (38 x 89 x TBD mm)
4	1	6.3 mm x 60 x 240 cm plywood board
5	4	Metal lath or screen 58 x 235 cm, painted black
6	Roll	Reflective insulation, approximately 1 x 2.5 m
7	TBD	Nails, 6d and 2d or similar
8	TBD	Staples or similar fasteners for plastic sheeting
9	1	U.V. stable 6 mil plastic sheeting (approx 0.6 x 2.5 m)
10	1	Mesh to cover air intake (approx 12 x 60 cm)

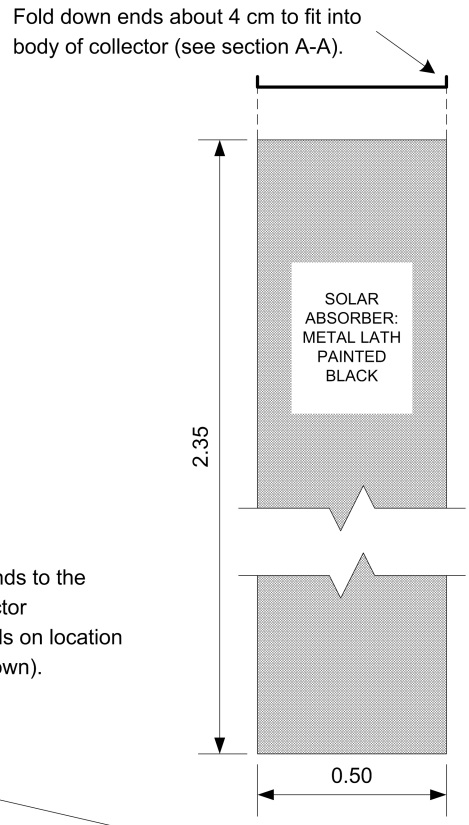

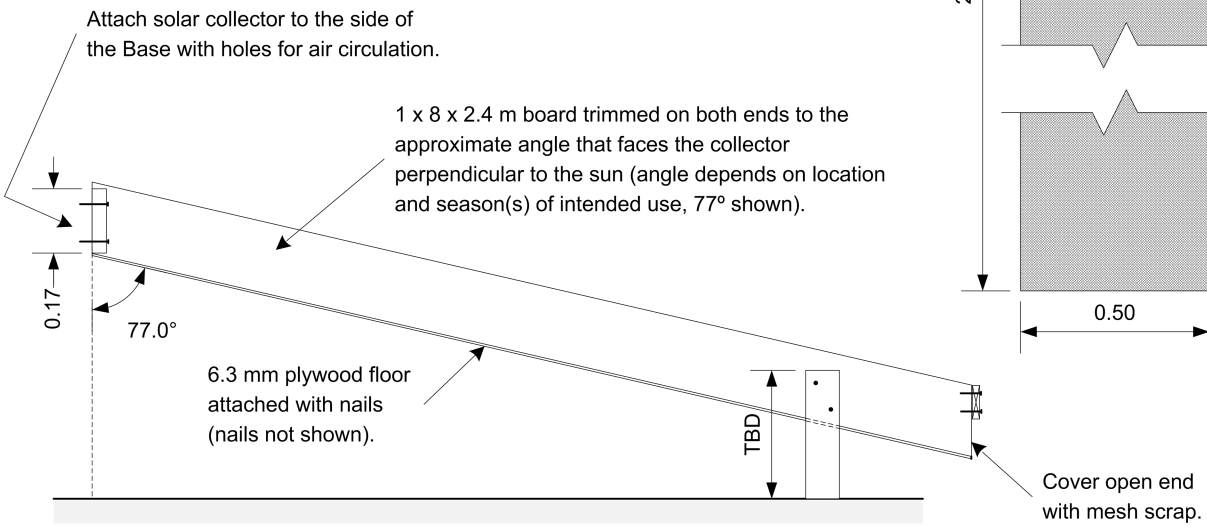

SIDE VIEW

Note: metal lath, plastic and insulation not shown on side and plan views

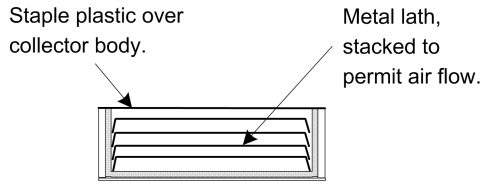

SECTION A-A

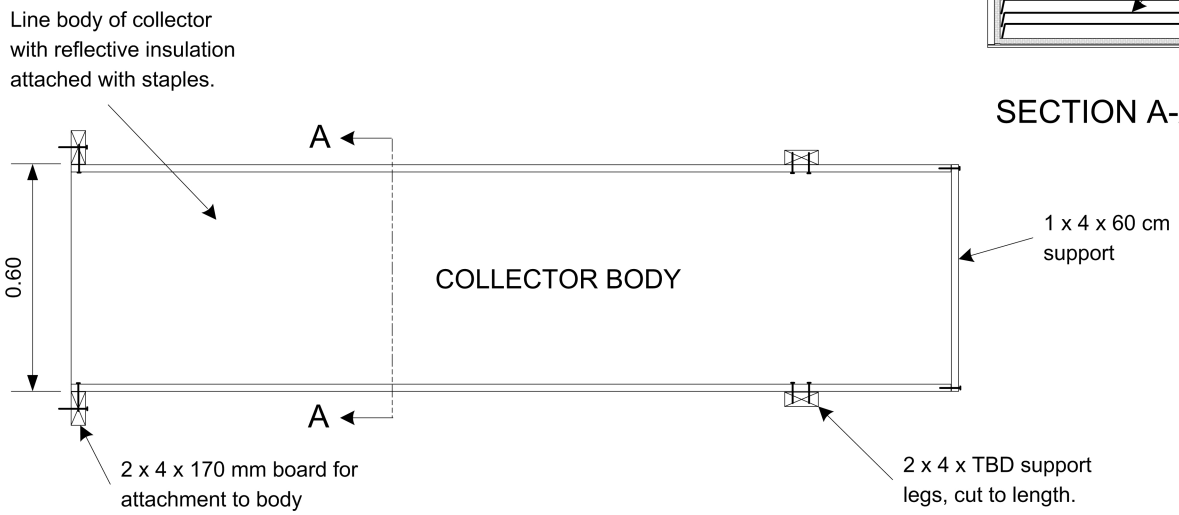

PLAN VIEW

Solar collector warms air with sunlight and transfers warm air to dehydrator.

TITLE		DESCRIPTION	
SOLAR DEHYDRATOR		SOLAR COLLECTOR	
DRAWN BY	DATE	SCALE	PAGE
TJ BOWSER	5/16/2017	1: 20	6 OF 7