WOOD MATERIALS		
ITEM	QTY.	DESCRIPTION
1	17	1 X 4 X 60 cm board (19 x 89 x 600 mm) trays & collector
2	2	1 X 8 X 80 cm board (19 x 184 x 800 mm) for base
3	2	1 X 8 X 60 cm board (19 x 184 x 600 mm) for base
4	2	1 x 8 x 2.4 m board (19 x 184 x 2,440 mm), collector
5	4	2 X 4 X TBD board (38 x 89 x TBD mm) base legs
6	2	2 x 4 x 17 cm board (38 x 89 x 170 mm) for base
7	2	2 x 4 x TBD board (38 x 89 x TBD mm) collector legs
8	1	6.3 mm x 60 x 64 cm plywood board for base
9	1	6.3 mm x 60 x 240 cm plywood board for collector
10	1	6.3 mm x 64 x 60 cm plywood board for fixed lid
11	1	6.3 mm x 44 x 38 cm plywood board for sliding lid cover

OTHER MATERIALS		
ITEM	QTY.	DESCRIPTION
1	4	Mesh screen (cut to size, approximately 60 x 64 cm) for trays
2	1	Mesh to cover air intake (approx 12 x 60 cm) for collector
3	1	Mesh screen (cut to size, approximately 40 x 40 cm) for lid
4	960 cm	Foam strip (cut to size), self-adhesive or other, for trays
5	TBD	Duct tape or other material to seal joints in base
6	4	58 x 235 cm metal lath or screen, painted black
7	Roll	Reflective insulation, approx. 1 x 2.5 m, trim to fit collector
8	1	U.V. stable 6-mil plastic sheet (approx. 0.6 x 2.5 m), collector
9	TBD	Nails, 6 d or similar for trays, base and other, about ½ lb.
10	TBD	Nails, 2 d or similar for plywood, about ¼ lb.
11	10	Nails, roofing or similar with wide head, for lid
12	TBD	Staples tacks or brads to fasten mesh screen & foam
13	4	Metal lath or screen 58 x 235 cm, painted black

ALTERNATIVE A: TWO PLYWOOD SHEET CUT PLAN

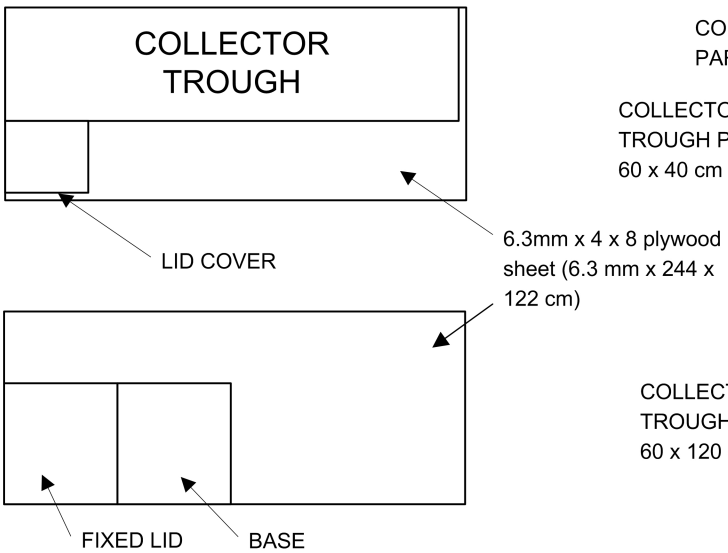

ALTERNATIVE B: SINGLE PLYWOOD SHEET CUT PLAN

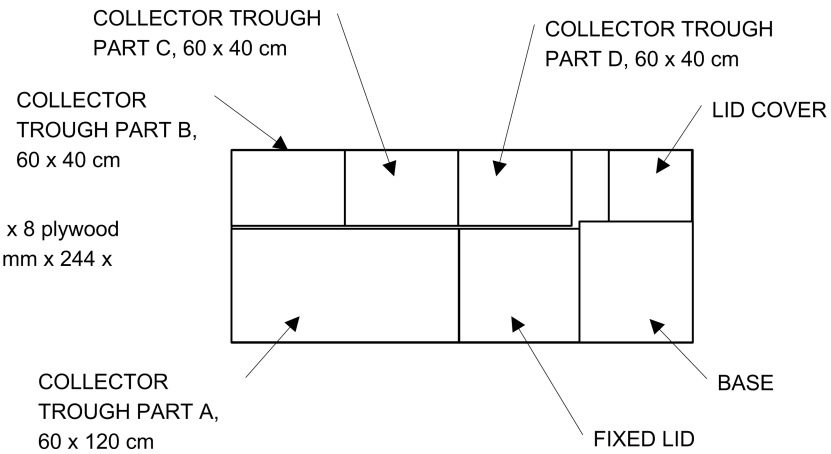

NOTE: COLLECTOR TROUGH BASE CUT IN FOUR SEPARATE PIECES (A TO D SHOWN) AND ASSEMBLED TO 60 X 240 mm

The cut & supplies sheet lists suggested materials needed for the project. Substitutions are encouraged based on cost, availability and imagination.

TITLE		DESCRIPTION	
SOLAR DEHYDRATOR		CUT & SUPPLIES SHEET	
DRAWN BY	DATE	SCALE	PAGE
TJ BOWSER	5/16/2017	1: 40	3 OF 7