MATERIALS		
ITEM	QTY.	DESCRIPTION
1	2	1 X 8 X 80 cm board (19 x 184 x 800 mm)
2	2	1 X 8 X 60 cm board (19 x 184 x 600 mm)
3	4	2 X 4 X TBD cm board (38 x 89 x TBD mm)
4	1	6.3 mm x 60 x 64 cm plywood board
5	TBD	Nails, 2d or similar
6	TBD	Duct tape or other sealant for joints

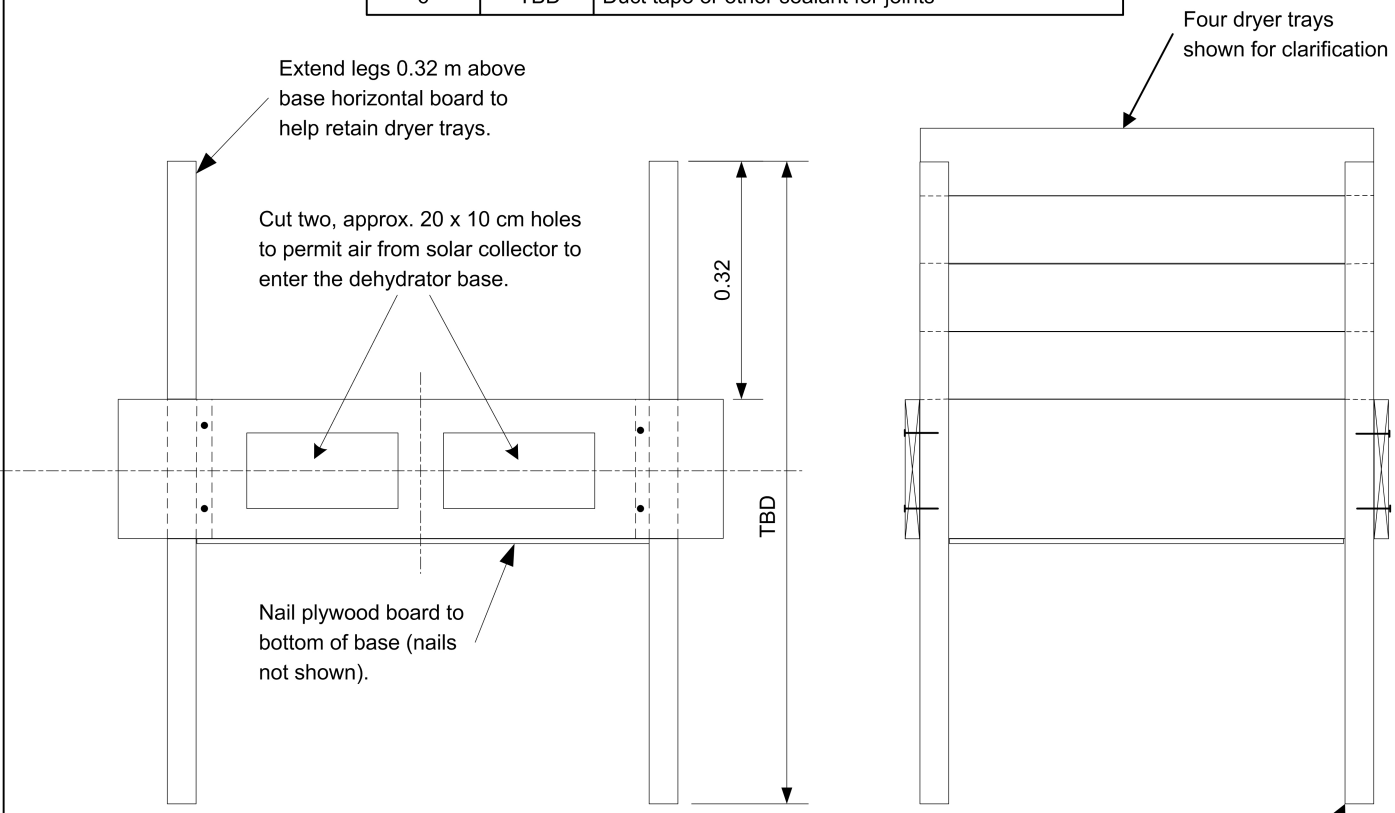

SIDE VIEWS

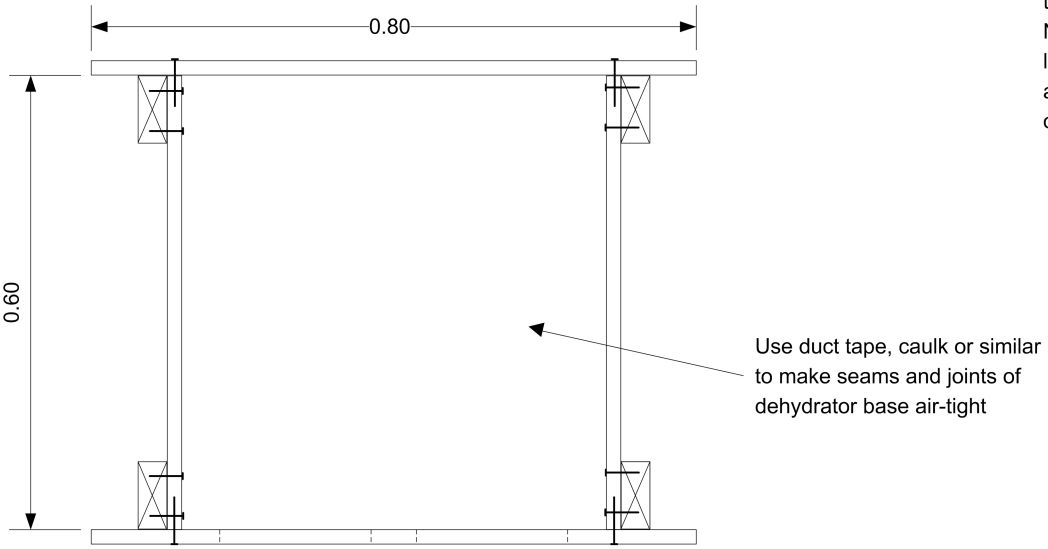

PLAN VIEW

Dehydrator base supports trays and solar collector.

TITLE		DESCRIPTION	
SOLAR DEHYDRATOR		DEHYDRATOR BASE	
DRAWN BY	DATE	SCALE	PAGE
TJ BOWSER	5/16/2017	1: 10	5 OF 7